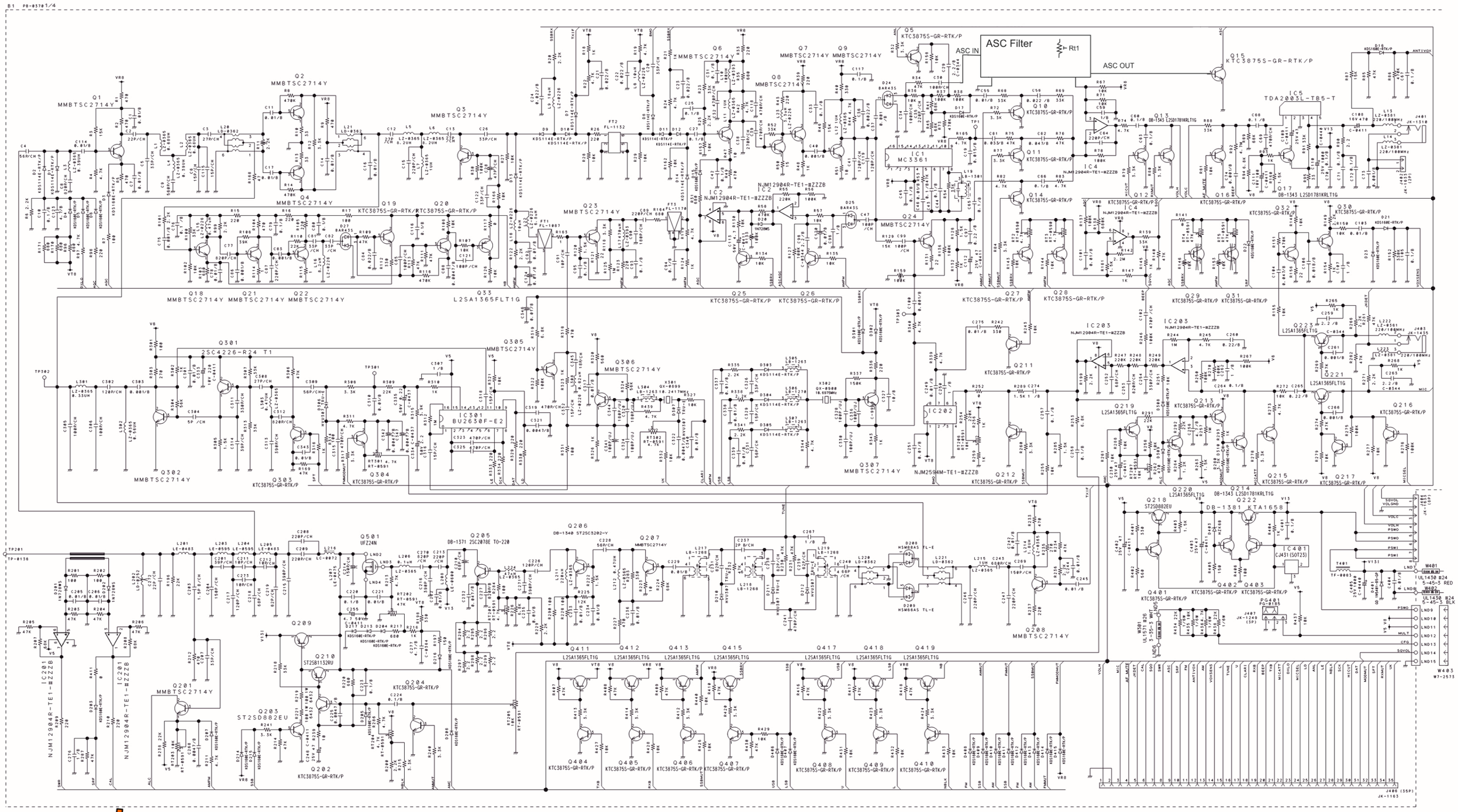

Downloaded from www.cbradio.nl

DESIGN BY	K.Hirabe	2011/11/15	TITLE: BLOCK DIAGRAM
CHECK BY	SAKURA	2011/12/19	REVISION NO
CHECK BY	YAMAZAKI	2011/12/19	TITLE: MAIN ASSY
APPROVE	MASAHIRO	2011/12/19	SCHEMATIC DIAGRAM
Uniden Corporation			DRAWING NO: [17-7621]

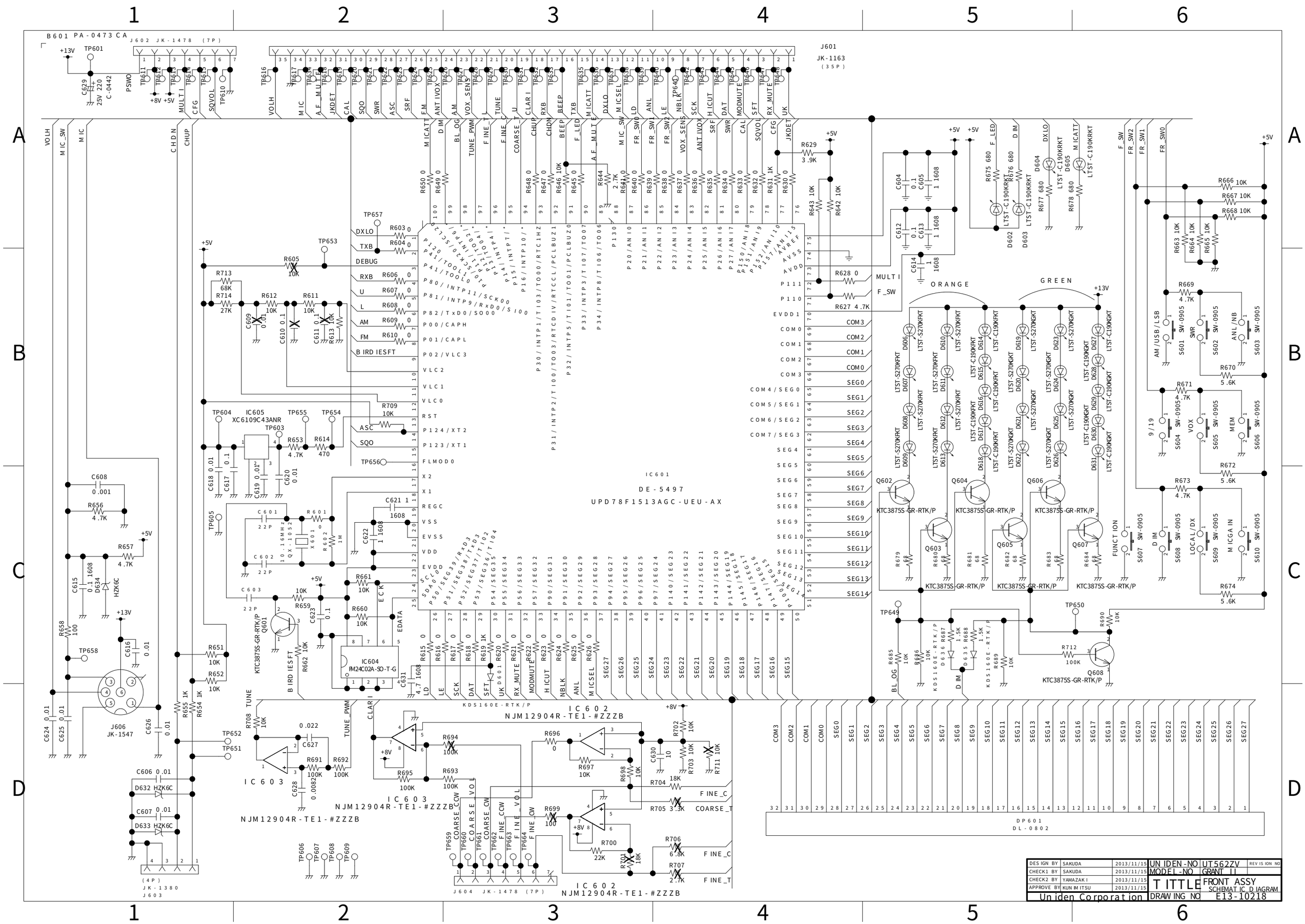
B601 PA-0473CA
J602 JK-1478 (7P)
J601
JK-1163
(35P)
IC601
DE-5497
UPD78F1513AGC-UEU-AX
IC604
RM24C02A-SO-T-G
IC605
XC6109C43ANR
IC602
NJM12904R-TE1-#ZZZB
IC603
NJM12904R-TE1-#ZZZB
J606
JK-1547
J603
JK-1380
(4P)
J604 JK-1478 (7P)
DP601
DL-0802
ORANGE
GREEN
KTC3875S-GR-RTK/P
KDS160E-RTK/P
DES IGN BY SAKUDA 2013/11/15
CHECK1 BY SAKUDA 2013/11/15
CHECK2 BY YAMAZAKI 2013/11/15
APPROVE BY KUNIMITSU 2013/11/15
UNIDEN-NO UT562ZV
MODEL-NO GRANT II
REVISION NO
TITLE FRONT ASSY SCHEMATIC DIAGRAM
DRAWING NO E13-10218
Uniden Corporation